# SID-X2N

4−Input Multi−Format Video over HDBaseT Transmitter & Step−IN Commander

The SID−X2N is an HDBaseT twisted pair transmitter and step−in commander for computer graphics video, HDMI, DVI, DisplayPort and unbalanced stereo audio signals.

## FEATURES

- Max. Data Rate - 6.75Gbps (up to 1080p @60Hz 36bpp) in normal mode; up to 4.95Gbps (up to 1080p @60Hz 24bpp) in ultra mode.
- HDTV Compatible.
- HDCP Compliant. - Works with sources that support HDCP repeater mode.
- HDMI Support - Deep Color, x.v.Color™ and 3D.
- I-EDIDPro™ Kramer Intelligent EDID Processing™ - Intelligent EDID handling & processing algorithm ensures Plug and Play operation for HDMI systems.
- Data Equalization and Reclocking.
- Input Signal Detection - Based on video clock presence.
- Automatic Input Selection - Based on manual selection or last connected input.
- Automatic Analog Audio Detection and Embedding.
- Local Balanced Audio De-Embedding.
- Support for Digital Audio Formats.
- Lockable EDID.
- System Range - Up to 130m (430ft) normal mode; up to 180m (590ft) ultra mode (1080p @60Hz @24bpp) when using BC−HDKat6a cables.
- Local Step-In Switching - Button & contact closure.
- Power Supply - Requires independent power supply.

# SID-X2N

## TECHNICAL SPECIFICATIONS
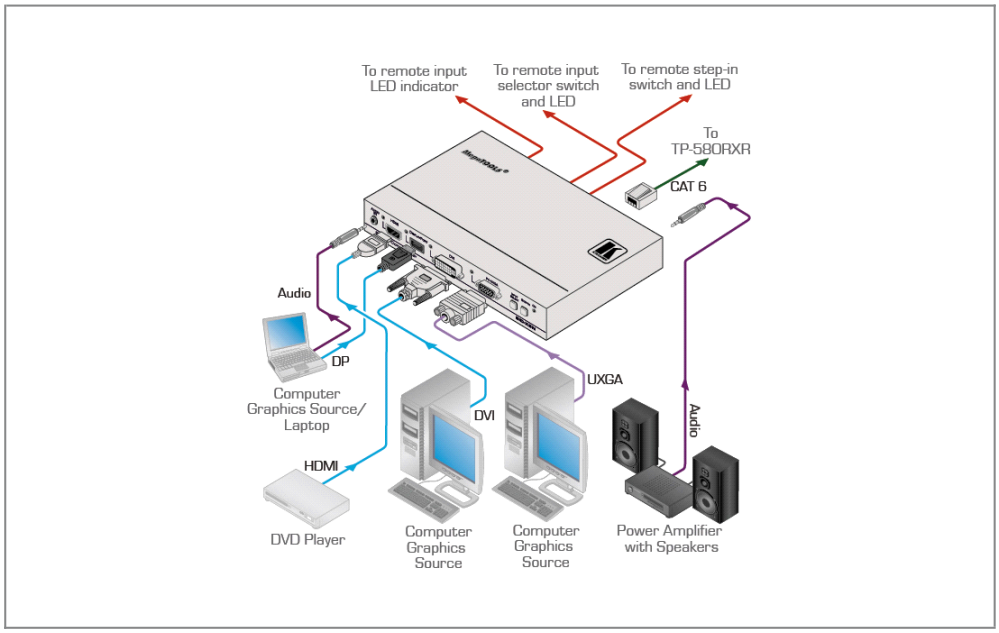
| | |
|---|---|
| INPUTS: | 1 HDMI, 1 DVI on a Molex 24−pin connector, 1 DisplayPort, 1 UXGA on a 15−pin HD connector, 1 unbalanced stereo audio on a 3.5mm mini jack. |
| OUTPUTS: | 1 HDBaseT on an RJ−45 connector, 1 unbalanced stereo audio on a 3.5mm mini jack. |
| STANDARDS: | HDMI with x.v.Color™ and 3D; HDCP: works with sources that support HDCP repeater mode. |
| MAXIMUM STEP-IN DISTANCE: | 50m (164ft) up to 1080p @60Hz. |
| POWER CONSUMPTION: | 12V DC, 820mA. |
| OPERATING TEMPERATURE: | 0° to +40°C (32° to 104°F). |
| STORAGE TEMPERATURE: | −40° to +70°C (−40° to 158°F). |
| HUMIDITY: | 10% to 90%, RHL non−condensing. |
| DIMENSIONS: | 18.8cm x 11.3cm x 2.5cm (7.4" x 4.5" x 1") W, D, H. |
| WEIGHT: | 0.48 kg (1.1lbs) approx. |
| INCLUDED ACCESSORIES: | Power supply. |
| OPTIONS: | RK−T2B 19" rack adapter, RTBUS−12, RTBUS−22, SID−X1BP Kit (substitute black top plate for the SID−X2N that blends with the color of the modular TBUS−10xl), RC−10TB remote contact closure switch. |