TP-122N

Computer Graphics Video & Stereo Audio over Twisted Pair Receiver

Compatible with HDTV component video signals when used with a breakout cable such as the Kramer C-GM/3RVF.

The TP−122N is a twisted pair receiver for computer graphics video, unbalanced stereo and S/PDIF audio signals. The unit receives a twisted pair signal from the TP−121EDID transmitter and converts it back into computer graphics video, unbalanced stereo and S/PDIF audio outputs.

FEATURES

- HDTV Compatible.
- Max. Resolution - WUXGA & 1080p.
- Level (Gain) and EQ (Peaking) Controls.
- System Range - Up to 100m (320ft).
- Cable - UTP (unshielded twisted pair) or STP (shielded twisted pair) such as CAT 5.
- Power Connect™ System - Only one unit in a system, the transmitter or the receiver needs to be connected to a power source when the devices are within 50m (150ft) of each other.
- Compact Kramer TOOLS™ - 3 units can be rack mounted side−by−side in a 1U rack space with the optional RK−3T rack adapter.

TP-122N

TECHNICAL SPECIFICATIONS
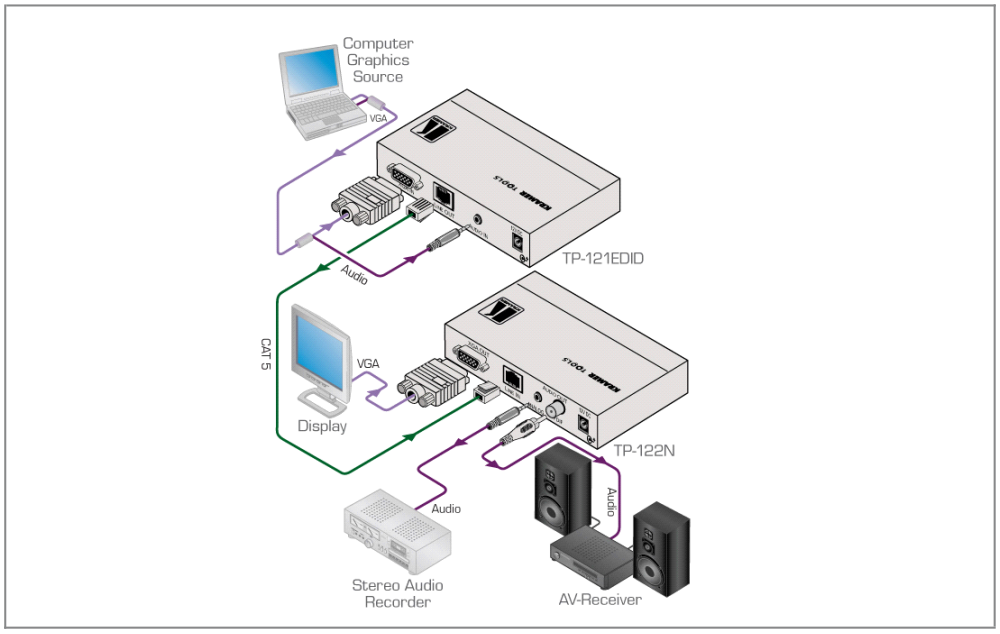
INPUT:	1 RJ−45 line in connector.
OUTPUT:	1 UXGA on a 15−pin HD connector, 1 S/PDIF on an RCA connector, 1 unbalanced stereo audio on a 3.5mm mini jack.
MAX. OUTPUT LEVEL:	Video: 1V; Audio: 2.5V.
MAX. RESOLUTION:	WUXGA & 1080p.
S/N RATIO:	Video: 58dB unweighted, 68.3dB @5MHz weighted; Audio: <–80dB.
TOTAL GAIN:	Audio: Analog/analog: 0dB., Analog/SPDIF: –12dBFS.
CONTROLS:	Level: –7.5dB to +4.4dB, EQ.: 0dB to +33dBu (130m) @50MHz.
COUPLING:	AC.
THD+N:	Audio: <0.01%.
POWER CONSUMPTION:	12V DC 190mA (TP−122N), 12V DC 540mA (TP−121EDID/TP−122N pair when powered from TP−121EDID via Power Connect), 12V DC 390mA (TP−121EDID/TP−122N pair when powered from TP−122N via Power Connect).
DIMENSIONS:	12cm x 7.5cm x 2.5cm (4.7” x 2.95” x 0.98”) W, D, H.
WEIGHT:	0.3kg (0.67lbs) approx.
INCLUDED ACCESSORIES:	Power supply.
OPTIONS:	RK−3T 19" rack adapter.