TP-126xl

Computer Graphics Video, Stereo Audio & Bidirectional RS−232 over Twisted Pair Receiver with EDID

Compatible with HDTV component video signals when used with a breakout cable such as the Kramer C-GM/3RVF.

The TP−126xl is an extended range twisted pair receiver for computer graphics video, unbalanced stereo audio and bidirectional RS−232 control command signals. The unit receives a twisted pair signal from the TP−125xl that it converts to computer graphics video, RS−232, unbalanced stereo and S/PDIF audio signals.

FEATURES

- Max. Resolution - WUXGA & 1080p.
- HDTV Compatible.
- System Range - More than 820ft (more than 250m).
- Cable - STP (shielded twisted pair) such as Kramer BC−STP CAT 5/6.
- Bidirectional RS-232 Interface - Commands and data can flow in both directions via the RS−232 interface, allowing status requests and control of the destination unit.
- Compact Kramer TOOLS® - 3 units can be rack mounted side−by−side in a 1U rack space with the optional RK−3T rack adapter.

TP-126xl

TECHNICAL SPECIFICATIONS
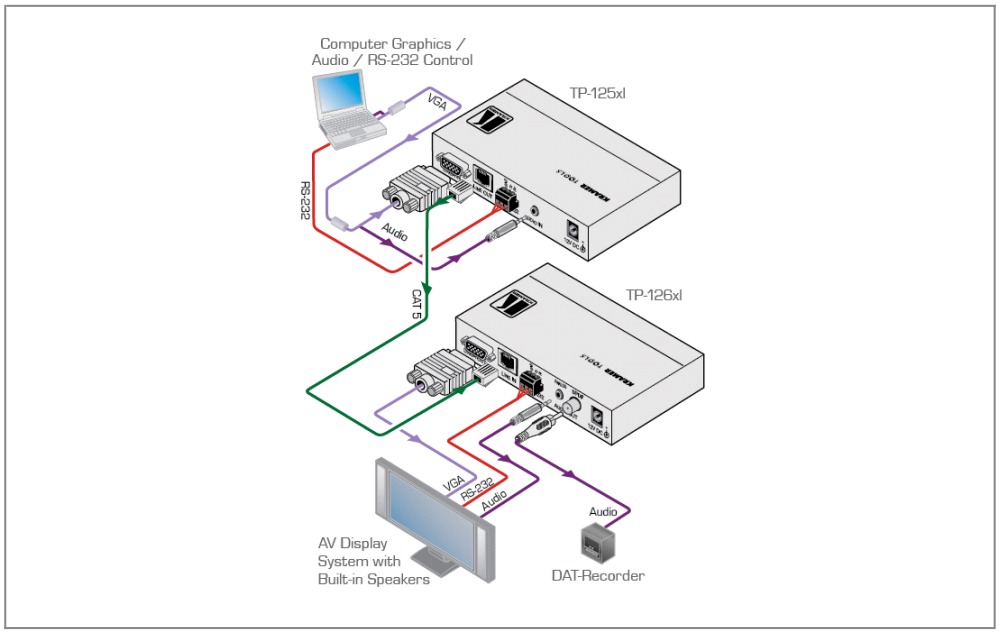
INPUTS:	1 twisted pair on an RJ−45 connector.
OUTPUT:	1 computer graphics on a 15−pin HD connector, 1 unbalanced stereo audio on a 3.5mm mini jack, 1 bidirectional RS−232 on a 3−pin terminal block.
RESOLUTION:	Up to WUXGA and 1080p.
MAX. OUTPUT LEVEL:	Video: 1.1V, Audio: 2.2V.
RS-232 BAUD RATE:	Up to 115.2kbps.
RS-232 MODE:	Full−duplex.
AUDIO BANDWIDTH (-3dB):	20Hz to 20kHz @−3dB.
S/N RATIO:	Video: 58dB unweighted, 68.3dB @5MHz weighted; Audio: <−84dB.
TOTAL GAIN:	Audio: Analog/analog: 0dB; Analog/SPDIF: –12dBFS.
COUPLING:	AC.
THD+N:	Audio: <0.02%.
CONTROLS:	Level: –7.5dB to +4.4dB; EQ: 0dBm to +33dBm (130m) @50MHz.
POWER CONSUMPTION:	12V DC, 760mA.
RANGE:	Up to 250m (820ft).
OPERATING TEMPERATURE:	0° to +40°C (32° to 104°F).
STORAGE TEMPERATURE:	−40° to +70°C (−40° to 158°F).
HUMIDITY:	10% to 90%, RHL non−condensing.
DIMENSIONS:	12.1cm x 7.18cm x 2.42cm (4.76" x 2.83" x 0.95") W, D, H.
WEIGHT:	0.48kg (1.1lbs) approx.
ACCESSORIES:	Power supply.
OPTIONS:	RK−3T 19” rack mount adapter.