KRAMER ELECTRONICS, Ltd.
www.kramerelectronics.com

VP-773AMP

8−Input HDMI & HDBaseT ProScale Presentation Switcher/Scaler with 2K Support and Audio Power Amplifier

The VP−773AMP is a high−performance presentation switcher and scaler. It accepts one of eight inputs: one DisplayPort (DP), one composite video, two computer graphics and four HDMI signals. It scales the video, embeds the audio, and simultaneously outputs the signal to two identical HDMI and one HDBaseT TP output, together with S/PDIF and balanced stereo audio outputs. The unit also includes an audio amplifier and speaker outputs.

FEATURES

- K-IIT XL™ Picture-in-Picture Image Insertion Technology - Ultra−stable picture−in−picture, picture−and−picture, and split screen capability. Any video source can be inserted into or positioned next to any other video source with full window positioning and sizing controls.
- Kramer's PixPerfect™ Scaling Technology - Kramer's precision pixel mapping and high quality scaling technology. High−quality 3:2 and 2:2 pull down de−interlacing and full up− and down−scaling of all video input signals.
- State−of−the−Art Video Processing Technology - For highest quality de−interlacing, noise reduction, and scaling performance for both standard−definition and high−definition signals.
- Ultra-Fast Fade-Thru-Black (FTB™) Switching - Video switching transitions are clean and ultra fast. The video fades to black and the new input fades from black for smooth, glitch−free switching. The output signal provides constant sync so the display never glitches.
- HDCP Compliant - The HDCP (High Definition Content Protection) license agreement allows copy−protected data on the HDMI input to pass only to the HDMI output.
- Advanced EDID Management - Per input; analyzes the EDID of a selectable Master connection to one of the outputs.
- Mass Notification Emergency Communication System (MNEC) - Activates a national or campus−wide notification, immediately displayed when an emergency situation develops. It uses automatic text overlaying, either via a crawler or a full screen cover up, as well as an optional audio alert.
- Max. Data Rate - 6.75Gbps (2.25Gpbs per graphic channel).
- Scaled Outputs - 2 HDMI & 1 HDBaseT (all outputs work simultaneously).
- Output Resolutions - HDTV and computer graphics up to 2K and 1080p/UXGA with selectable refresh rates.
- HDMI Deep Color Support - For all inputs and outputs.
- Luma Keying - Via PIP window.
- Vertical Keystone Operation.
- Built-in Proc-Amp - With enhanced functions such as color correction, gamma and dither.
- Multi-Standard Video Support - NTSC (3.58/4.43), PAL (M/N/60) and SECAM with advanced de−interlacing options.
- Built-in Time Base Corrector - Stabilizes unstable video sources.

- Picture Zooming - Both on main and PIP window from 100% to 1600%, including separate V and H sharpness control.
- Input and Output Colorspace Control.
- Audio Support - Unbalanced stereo audio inputs, with two microphone inputs; digital stereo and balanced stereo outputs; input and output audio level adjustment.
- Selectable Microphone Talkover or Mix Modes.
- Microphone Inputs - 2 dynamic or condenser (with 48V phantom voltage).
- Audio Amplifier & Speaker Output - 2x10W.
- Automatic Detection and Selection of Embedded Audio - Automatically outputs the signal from the HDMI and DP embedded audio inputs or performs an analog takeover to output the respective analog audio input.
- Range - Up to 130m (430ft) normal mode; up to 180m (590ft) ultra mode (1080p @60Hz @24bpp) when using BC−HDKat6a cables.
- On-Screen Display (OSD) - For easy setup and adjustment, accessible via the IR remote control and via the front−panel buttons.
- Built-in Web Page Server.
- Non-Volatile Memory - Saves final settings.
- Firmware Upgrades - Via Ethernet and RS−232.
- Flexible Control Options - Front panel buttons, OSD (on−screen display) via front panel buttons or IR remote (remote control included), embedded Web server.
- Port Tunneling - A bidirectional RS−232 interface where simple control commands and data can flow in both directions from a controller to the VP−773AMP via the Ethernet, allowing status requests and control of the destination unit
- Selectable Power Save Modes - For efficient energy use.
- Worldwide Power Supply - 100−240V AC.
- Standard 19" Rack Mount Size - 1U. Rack "ears" included.
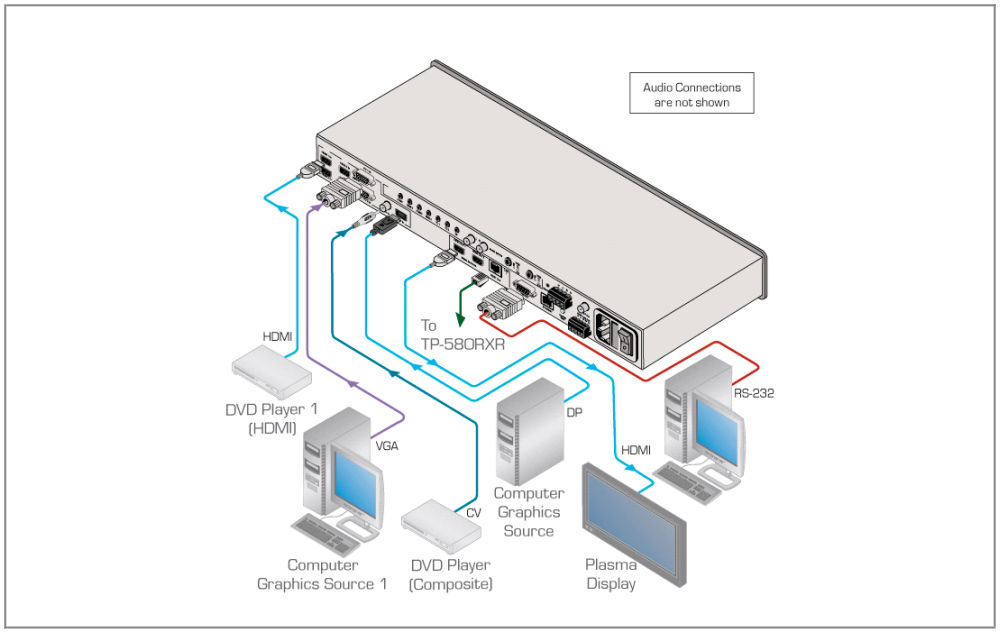
	1400x1050@60, 1600x900@60, 1600x1200@50, 1600x1200@60, 1680x1050@60, 1920x1200@60, 480i60, 480p60, 576i50, 576p50, 720p50, 720p59.94, 720p60, 1080p23.976, 1080p24, 1080p25, 1080p29.97, 1080p30, 1080p50, 1080p59.94, 1080p60, 2048x1080@60Hz, 2048x1080@50Hz.
CONTROLS:	Front panel buttons, OSD, IR remote control, RS−232 on a 9−pin D−sub connector, Ethernet.
OPERATING TEMPERATURE:	0° to +40°C (32° to 104°F).
STORAGE TEMPERATURE:	−40° to +70°C (−49° to 158°F).
HUMIDITY:	10% to 90%, RHL non−condensing.
POWER SOURCE:	100−240V AC, 40VA max.
DIMENSIONS:	19" x 9.3" x 1U (W, D, H) rack mountable.
WEIGHT:	3kg (6.6lbs) approx.
INCLUDED ACCESSORIES:	Power cord, rack “ears”, IR remote control.