VP-774A

9−Input HDMI & HDBaseT ProScale™ Presentation Switcher/Scalers with 2K Support and Audio Power Amplifier

The VP−774AMP is a high−performance presentation switcher and scaler. It accepts one of nine inputs: one DisplayPort (DP), one composite video, two computer graphics, one 3G HD−SDI and four HDMI signals. It scales the video, embeds the audio, and simultaneously outputs the signal to two identical HDMI, one HDBaseT and one 3G HD−SDI output, together with S/PDIF and balanced stereo audio outputs. The unit also includes an audio amplifier and speaker outputs.

FEATURES

- K-IIT XL™ Picture-in-Picture Image Insertion Technology - Ultra−stable picture−in−picture, picture−and−picture, and split screen capability. Any video source can be inserted into or positioned next to any other video source with full window positioning and sizing controls.
- Kramer's PixPerfect™ Scaling Technology - Kramer's precision pixel mapping and high quality scaling technology. High−quality 3:2 and 2:2 pull down de−interlacing and full up− and down−scaling of all video input signals.
- State−of−the−Art Video Processing Technology - For highest quality de−interlacing, noise reduction, and scaling performance for both standard−definition and high−definition signals.
- Ultra-Fast Fade-Thru-Black (FTB™) Switching - Video switching transitions are clean and ultra fast. The video fades to black and the new input fades from black for smooth, glitch−free switching. The output signal provides constant sync so the display never glitches.
- HDCP Compliant - The HDCP (High Definition Content Protection) license agreement allows copy−protected data on the HDMI input to pass only to the HDMI output.
- Advanced EDID Management - Per input; analyzes the EDID of a selectable Master connection to one of the outputs.
- Mass Notification Emergency Communication System (MNEC) - Activates a national or campus−wide notification, immediately displayed when an emergency situation develops. It uses automatic text overlaying, either via a crawler or a full screen cover up, as well as an optional audio alert.
- Max. Data Rate - 6.75Gbps (2.25Gpbs per graphic channel).
- Multi-Standard SDI Support - SDI (SMPTE 259M), HD−SDI (SMPTE 292M) and 3G HD−SDI (SMPTE 424M).
- Scaled Outputs - 2 HDMI, 1 HDBaseT, 1 3G HD−SDI (all outputs work simultaneously).
- Output Resolutions - HDTV and computer graphics up to 2K and 1080p/UXGA with selectable refresh rates.
- HDMI Deep Color Support - For all inputs and outputs.
- Luma Keying - Via PIP window.
- Vertical Keystone Operation.
- Built-in Proc-Amp - With enhanced functions such as color correction, gamma and dither.

- Multi-Standard Video Support - NTSC (3.58/4.43), PAL (M/N/60) and SECAM with advanced de−interlacing options.
- Built-in Time Base Corrector - Stabilizes unstable video sources.
- Picture Zooming - Both on main and PIP window from 100% to 1600%, including separate V and H sharpness control.
- Input and Output Colorspace Control.
- Audio Support - Unbalanced stereo audio inputs, with two microphone inputs; digital stereo and balanced stereo outputs; input and output audio level adjustment.
- Selectable Microphone Talkover or Mix Modes.
- Microphone Inputs - 2 dynamic or condenser (with 48V phantom voltage).
- Audio Amplifier & Speaker Output - 2x10W.
- Automatic Detection and Selection of Embedded Audio - Automatically outputs the signal from the HDMI and DP embedded audio inputs or performs an analog takeover to output the respective analog audio input.
- Range - Up to 130m (430ft) normal mode; up to 180m (590ft) ultra mode (1080p @60Hz @24bpp) when using BC−HDKat6a cables.
- On-Screen Display (OSD) - For easy setup and adjustment, accessible via the IR remote control and via the front−panel buttons.
- Built-in Web Page Server.
- Non-Volatile Memory - Saves final settings.
- Firmware Upgrades - Via Ethernet and RS−232.
- Flexible Control Options - Front panel buttons, OSD (on−screen display) via front panel buttons or IR remote (remote control included), embedded Web server.
- Port Tunneling - A bidirectional RS−232 interface where simple control commands and data can flow in both directions from a controller to the VP−773 via the Ethernet, allowing status requests and control of the destination unit
- Selectable Power Save Modes - For efficient energy use.
- Worldwide Power Supply - 100−240V AC.
- Standard 19" Rack Mount Size - 1U. Rack "ears" included.
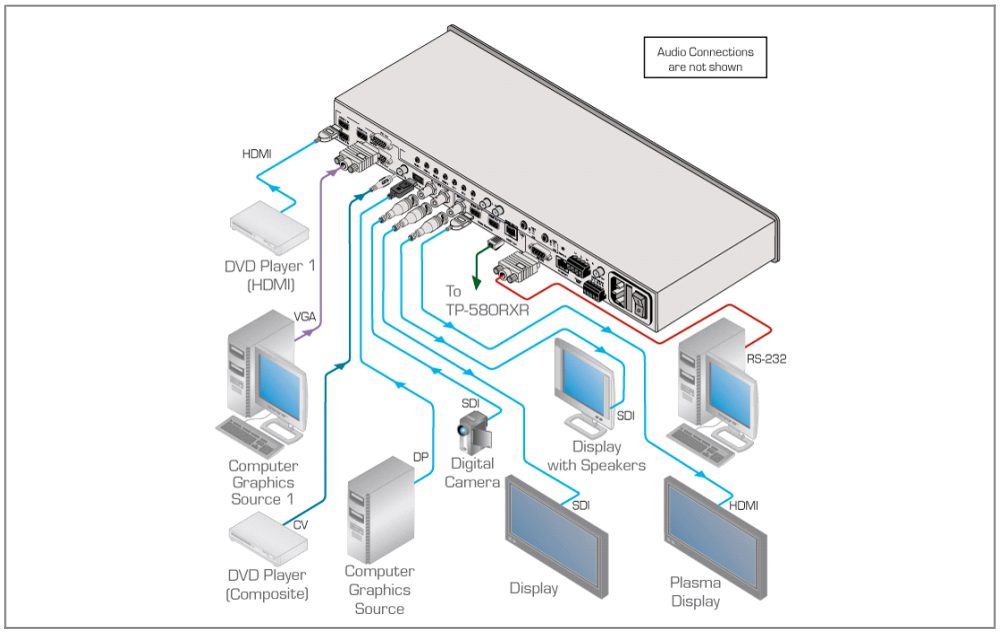
TEMPERATURE:	
HUMIDITY:	10% to 90%, RHL non−condensing.
POWER SOURCE:	100−240V AC, 40VA max.
DIMENSIONS:	19" x 9.3" x 1U (W, D, H) rack mountable.
WEIGHT:	3kg (6.6lbs) approx.
INCLUDED ACCESSORIES:	Power cord, rack “ears”, IR remote control.